B4MATSW.Rev12

© COPYRIGHT

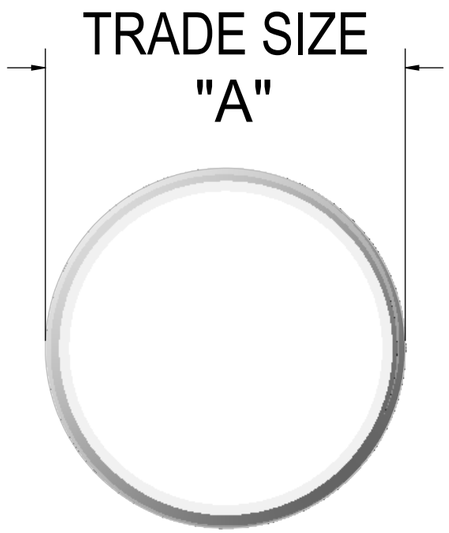

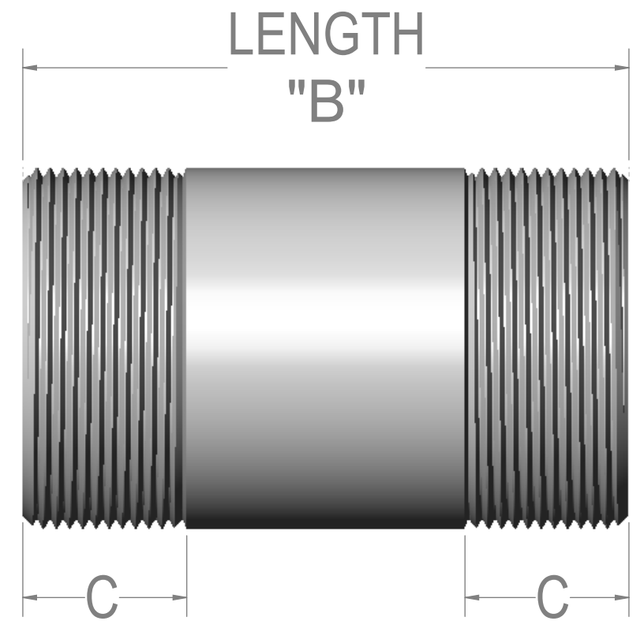

NOTE:
WHEN ORDERING NIPPLE, USE BASE P/N X LENGTH

(I.E.) N4050XCLOSE FOR 304SS 1/2" X CLOSE NIPPLE

TRADE SIZE "A" INCH	LENGTH "B" INCHES	"C" INCH	304 SS BASE PART NUMBER	316 SS BASE PART NUMBER
1/2"	CLOSE, 2", 2 1/2", 3", 3 1/2", 4," 6", 8", 10", 12"	.53	N4050X_**"LENGTH"**	N6050X_**LENGTH**
3/4"	CLOSE, 2", 2 1/2", 3", 3 1/2", 4", 6", 8", 10", 12"	.55	N4075X_____	N6075X_____
1"	CLOSE, 2", 2 1/2", 3", 3 1/2", 4", 6", 8", 10", 12"	.68	N4100X_____	N6100X_____
1 1/4"	CLOSE, 2", 2 1/2", 3", 3 1/2", 4", 6", 8", 10", 12"	.71	N4125X_____	N6125X_____
1 1/2"	CLOSE, 2", 2 1/2", 3", 3 1/2", 4", 6", 8", 10", 12"	.72	N4150X_____	N6150X_____
2"	CLOSE, 2", 2 1/2", 3", 3 1/2", 4", 6", 8", 10", 12"	.76	N4200X_____	N6200X_____
2 1/2"	CLOSE, 2", 2 1/2", 3", 3 1/2", 4", 6", 8", 10", 12"	1.14	N4250X_____	N6250X_____
3"	CLOSE, 2", 2 1/2", 3", 3 1/2", 4", 6", 8", 10", 12"	1.20	N4300X_____	N6300X_____
4"	CLOSE, 2", 2 1/2", 3", 3 1/2", 4", 6", 8", 10", 12"	1.30	N4400X_____	N6400X_____

TOLERANCE, UNLESS NOTED		
	INCH	MILLIMETER
FRACTION	+/- 1/32"	N/A
X.	+/- 0.100	+/- 3.0
X.X	+/- 0.030	+/- 1.0
X.XX	+/- 0.015	+/- 0.5
X.XXX	+/- 0.005	+/- 0.1

REV	DATE	SUMMARY DESCRIPTION OF CHANGES	BY	APP	REV	DATE	SUMMARY DESCRIPTION OF CHANGES	BY	APP
1					7				
2					8				
3					9				
4					10				
5					11				
6					12				

NOTICE
THIS DRAWING HAS NOT BEEN PUBLISHED AND IS THE SOLE PROPERTY OF ILS PRODUCTS. IT IS LENT TO THE BORROWER FOR HIS CONFIDENTIAL USE ONLY. IN CONSIDERATION OF THIS LOAN THE BORROWER PROMISES TO RETURN IT UPON REQUEST AND AGREES THAT IT SHALL NOT BE REPRODUCED, COPIED, LENT, OR OTHERWISE DISPOSED OF, DIRECTLY OR INDIRECTLY, NOR USED FOR ANY PURPOSE OTHER THAN THAT FOR WHICH IT IS SPECIFICALLY FURNISHED.

DRAWN	ARC	DATE	7/6/15
CHECKED	ARC	DATE	7/6/15
APPROVED	ARC	DATE	7/6/15
NEXT ASS'Y	N/A	WEIGHT	N/A

NOTE:
1) DEBURR ALL SHARP EDGES.
2) MARK FINISHED PARTS WITH PART NUMBER PER WORK ORDER OR PURCHASE ORDER.

I.L.S. PRODUCTS

I.L.S Products
17315 Houston Drive
Cypress (Houston), TX 77433
Phone: 281-758-4788
Fax: 832-201-8803
globalils.com

TITLE
I.L.S.PRODUCTS
NIPPLE SPECIFICATION

SCALE	1:1	DWG. NO.	REV
CUSTOMER	N/A	NIPPLE SPEC	0